REVISIONS				
REV	CHANGE DESCRIPTION	BY	DATE	APPROV
A	INITIAL RELEASE	T.S.	6/4/97	

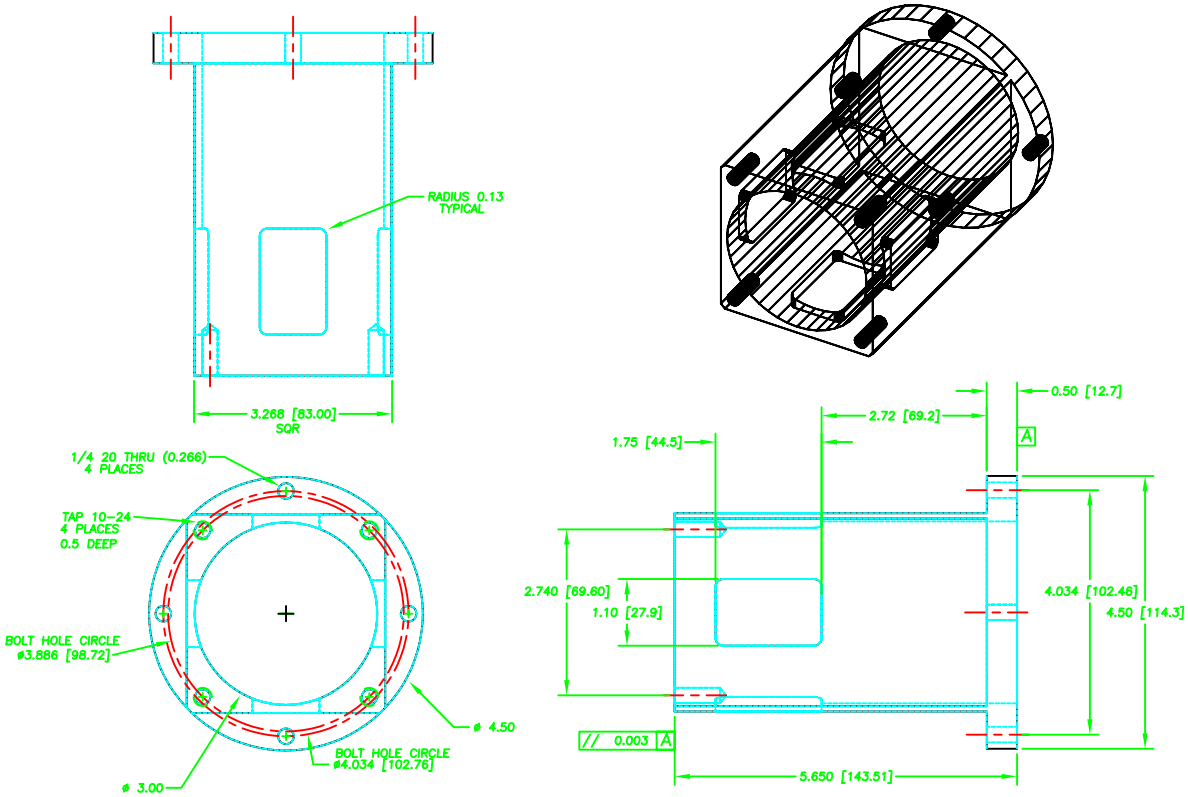

MATERIAL: AL 6062

NOTES:

DWG_NUMBER

NEXT ASSEMBLY

SECTOR 7 — MHATT-CAT
UNIVERSITY OF MICHIGAN–HOWARD UNIVERSITY–LUCENT TECHNOLOGIES

UNLESS OTHERWISE SPECIFIED: ALL DIMENSIONS ARE IN INCHES
TOLERANCES
DECIMALS: X ±.1; .XX ±.01; .XXX ±.005
ANGULAR: ±.25°
SURFACE ROUGHNESS 125√

REMOVE ALL BURRS AND BREAK SHARP EDGES .03 MAX.
SURFACE TEXTURE TO BE IN ACCORDANCE WITH LUCENT ANSI B46.1
DIMENSIONS & TOLERANCES IN ACCORDANCE WITH LUCENT ANSI Y14.5

DO NOT SCALE DRAWING

DRAWN BY	BILL BARG/PNC	6/2/96
CHECKED BY	T.SANCHEZ	6/4/97
COGNIZANT ENGINEER	T.SANCHEZ	6/4/97
PROJECT MANAGER		
DIRECTOR		
CAD FILE NAME	M15205PA	

DISCLOSURE OF THIS PROPRIETARY AND CONFIDENTIAL INFORMATION IS EXPRESSLY PROHIBITED WITHOUT HOWARD UNIVERSITY– –MHATT– –CAT'S WRITTEN PERMISSION.

TITLE: MHATT–CAT HH DC
HUBER GONIOMETER ASSY
MOTOR MOUNT

SIZE	DRAWING NUMBER	STATUS	REV
C	7HM–15205	P	A

SCALE | SHEET: 1 OF 1