REVISIONS				
REV	CHANGE DESCRIPTION	BY	DATE	APPROV
A	INITIAL RELEASE	T.S.	2/19/97	

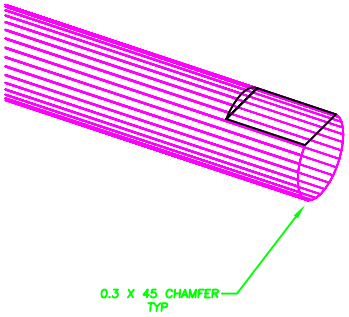

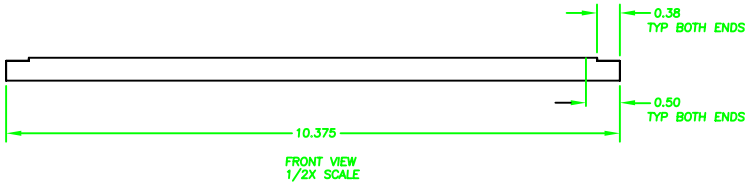

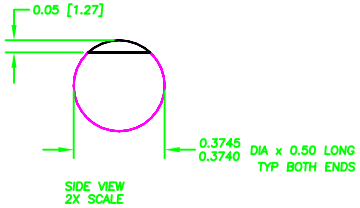

6– MATERIAL: 303 STAINLESS STEEL 3/8" DIA GROUND SHAFT
W.M.BERG GROUND SHAFT P/No: S6–110

5– CLEAN PARTS SHALL BE STORED AND SHIPPED WRAPPED IN OIL FREE ALUMINUM FOIL.

4– LINT –FREE NYLON GLOVES ARE TO BE WORNED DURING ASSY.
NO FINGER PRINTS ARE PERMITTED.

3– NO HYDROCARBON CONTAMINATION IS PERMITTED.
FOR CLEANING PROCEDURES SEE APS TECH SPECS # 410201–00095.

2– WHEN MACHINING NO SILICON OR SULFUR CUTTING FLUIDS ARE ALLOWED.

1– THIS IS A UHV COMPONENT

NOTES:

DWG_NUMBER

NEXT ASSEMBLY

SECTOR 7

MHATT–CAT
UNIVERSITY OF MICHIGAN–HOWARD UNIVERSITY–LUCENT TECHNOLOGIES

UNLESS OTHERWISE SPECIFIED:
ALL DIMENSIONS ARE IN INCHES
TOLERANCES
DECIMALS .X ± .1 .XX ± .01 .XXX ± .005
ANGULAR ± .25°
SURFACE ROUGHNESS 125√
REMOVE ALL BURRS AND BREAK SHARP EDGES .03 MAX.
SURFACE TEXTURE TO BE IN ACCORDANCE WITH LATEST ANSI B46.1
DIMENSIONING & TOLERANCING IN ACCORDANCE WITH LATEST ANSI Y14.5

DO NOT SCALE DRAWING

DRAWN BY	BILL BARG/PNC	6/6/96
CHECKED BY	T.SANCHEZ	6/6/97
CONSULTANT ENGINEER	T.SANCHEZ	6/6/97
PROJECT MANAGER		
DIRECTOR		
CAD FILE NAME	M15203PA	

DISCLOSURE OF THIS PROPRIETARY AND CONFIDENTIAL INFORMATION IS EXPRESSLY PROHIBITED WITHOUT HOWARD UNIVERSITY– –MHATT– –CATT'S WRITTEN PERMISSION.

TITLE
MHATT–CAT HH DC
HUBER GONIOMETER ASSY
SHAFT– DRIVE

SIZE	DRAWING NUMBER	STATUS	REV
C	7HM–15203	P	A

SCALE:
SHEET: 1 OF 1